14 GAUGE STAINLESS STEEL

SIX STATION A.D.A. FLOOR MOUNTED SINK WITH TUBULAR LEGS & CROSS BRACING

WITH/WITHOUT MANUAL FAUCETS

"-F" Series Sink Includes K-161-LU Gooseneck Faucets with Wrist Handles

Item #: _____ Qty #: _____

Model #: _____

Project #: _____

14 Gauge

A.D.A. COMPLIANT

NSF

FEATURES:

8 1/2" high backsplash.
5" sink bowl depth.
Two stainless steel "Z" brackets.
Three **K-6** 3 1/2" rear basket drains.
Tubular stainless steel legs with flanged feet.
Side & rear adjustable cross-bracing with leg clamps.
Manual Operated: Faucets sold separately.
"-F" Series includes six **K-161-LU** 6" gooseneck faucets.

CONSTRUCTION:

All TIG welded.
Welded areas blended to match adjacent surfaces and to a satin finish.

MATERIAL:

All 14 gauge type "304" stainless steel.
1 5/8" tubular "304" stainless steel legs & cross-bracing.
Stainless steel gussets.

MECHANICAL:

8" O.C. faucet holes punched at each station.

Model #	Length	# of Faucets Sink Accommodates	# of Faucets Included	Wt.	Cu. Ft.
FS-FM-120-ADA	120"	6	0 (Faucets Not Included)	200 lbs.	83
FS-FM-120-ADA-F	120"	6	6 (K-161-LU Faucets Included)	212 lbs.	83

Click Here For Install Guide

MULTI-STATION ACCESSORIES & REPLACEMENT PARTS

Model	Description	QTY:
K-6	3 1/2" Drain (1 1/2" I.P.S.)	_____
K-13	Stainless Steel Soap Dispenser (Wall Mount Only)	_____
K-06	Splash Mount Faucet Mounting Kit	_____
K-101	8" Swing Spout Splash Mt. Faucet	_____
K-159	Splash Mounted 3-1/2" Gooseneck Faucet *(8" O.C.)*	_____
K-160	Splash Mounted 6" Swivel Spout Faucet *(8" O.C.)*	_____
K-161-LU	Splash Mounted 6" Gooseneck With Wrist Handles *(8" O.C.)*	_____
K-411	Strainer Plate for 3-1/2" Drain	_____
K-1118	Extra H.D. 8" Splash Mounted Faucet	_____
K-316-LU	Wrist Handles	_____
K-472	Faucet Hole Revision *(Manual Faucet Operated Sinks Only)*	_____
K-449	5" Backsplash Modification (Used When Installing A Mirror Over An Ada Multi-Station Or Service Sink) Mirror Supplied By Others	_____
K-508	Special Sizing Charge *(Larger Size Cut Down To Smaller Size)*	_____
TA-19	Adjustable Stainless Steel Flanged Bullet Foot	_____

K-159

K-160

K-161-LU

K-13

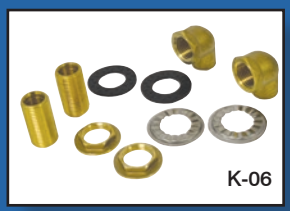

K-06

= Ships UPS

Standard Faucets conform to NSF 61 Standard 9 and compliance to AB 1953 Standards.

⚠ **WARNING:** Equipment that include faucets on this page may contain a chemical known to the State of California to cause cancer, birth defects or other reproductive harm.

ADVANCE TABCO SMART FABRICATION™ www.advancetabco.com

Customer Service Available To Assist You 1-800-645-3166 8:30 am - 7:00 pm E.S.T.

For Orders & Customer Service:
Email: customer@advancetabco.com or Fax: 631-242-6900

For Smart Fabrication™ Quotes:
Email: smartfab@advancetabco.com or Fax: 631-586-2933

DETAILS and SPECIFICATIONS

TOL ± .500” FITTINGS SUPPLIED AS SHOWN ALL DIMENSIONS ARE TYPICAL

FS-FM-120-ADA

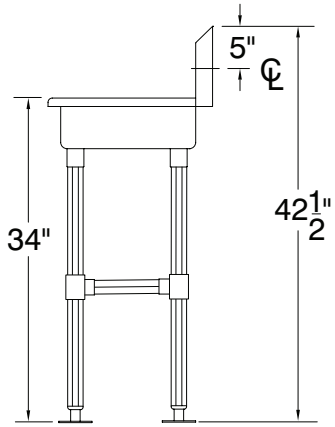

A.D.A.
COMPLIANT

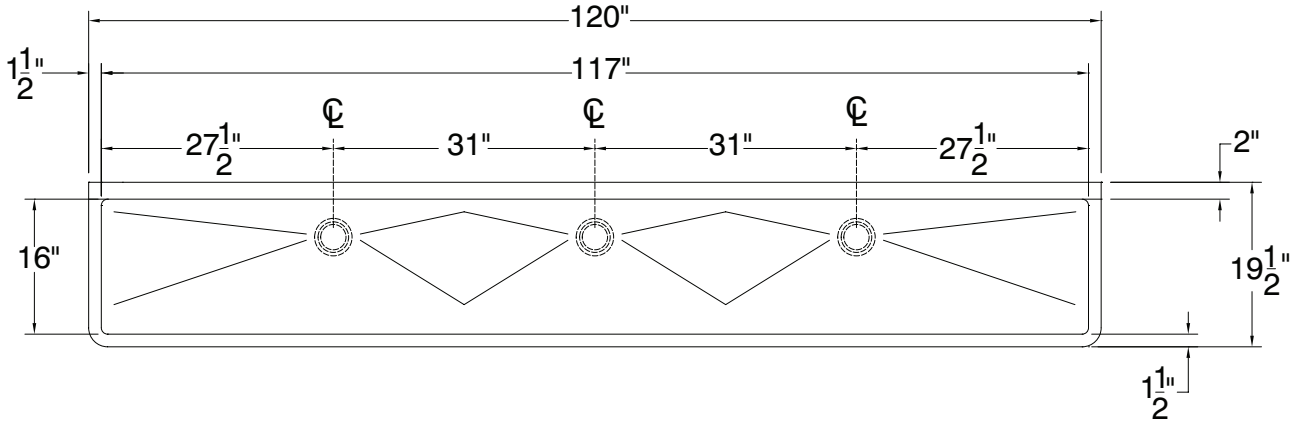

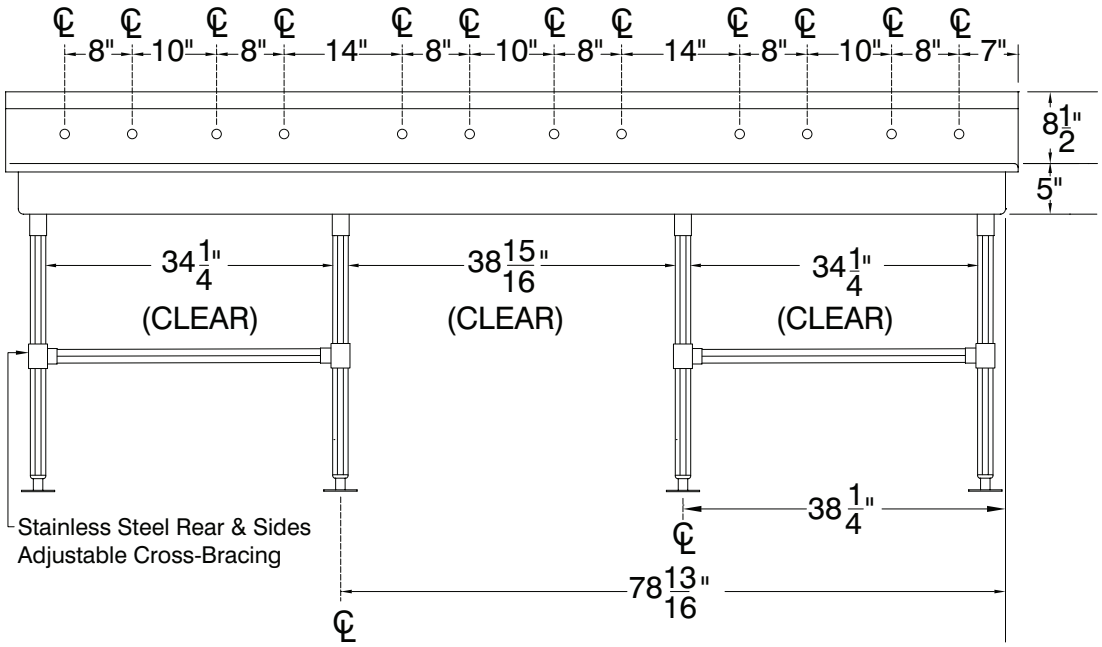

200 Lbs.

ADVANCE TABCO
SMART FABRICATION™

ADVANCE TABCO is constantly engaged in a program of improving our products. Therefore, we reserve the right to change specifications without prior notice.

325 Wireless Boulevard, Hauppauge, NY 11788
© ADVANCE TABCO, JANUARY 2022